MNV-4K2

Miniature Needle Valve, 1/8" Hose Fitting with Knurled Knob

Air Flow	5 scfm @ 100 psig
Max PSI	300 psig
Mount	Direct (#15/32-32 thread)
Weight (lbs.)	0.0300

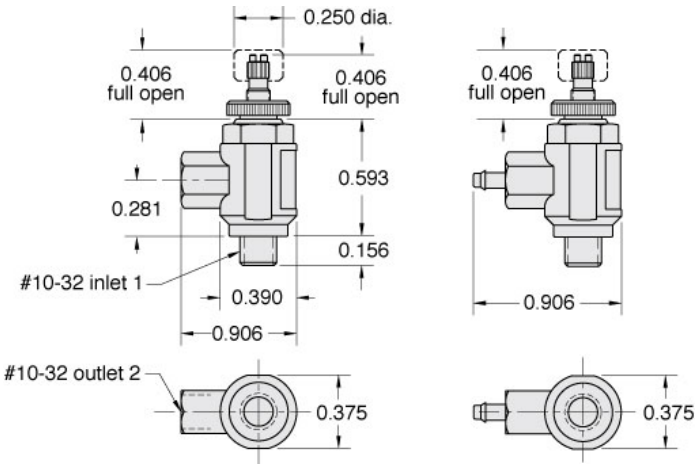
0.250 dia.
0.406
full open
0.406
full open
0.406
full open
0.593
0.281
0.156
#10-32 inlet 1
0.390
0.906
0.906
#10-32 outlet 2
0.375
0.375

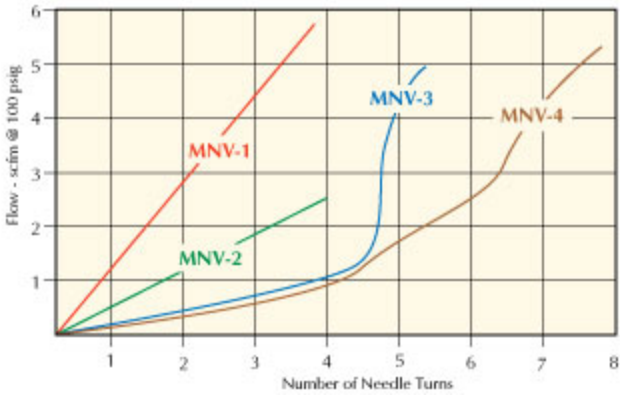
Flow - scfm @ 100 psig
Number of Needle Turns
MNV-1
MNV-2
MNV-3
MNV-4

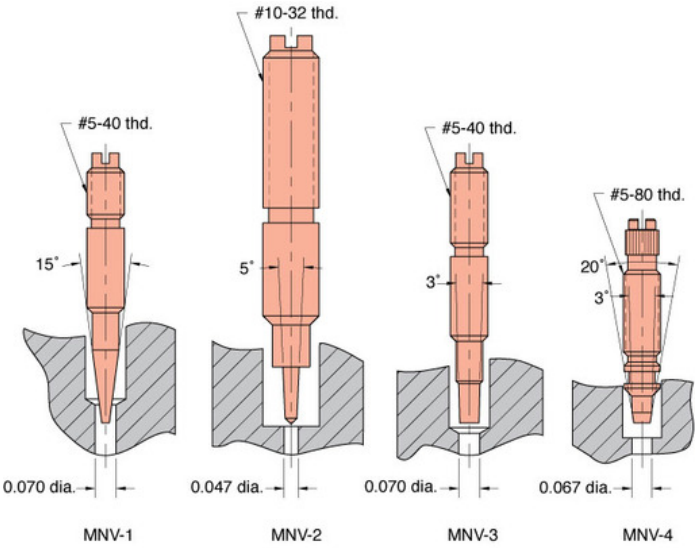
#10-32 thd.
#5-40 thd.
#5-40 thd.
#5-80 thd.
15°
5°
3°
20°
3°
0.070 dia.
0.047 dia.
0.070 dia.
0.067 dia.
MNV-1
MNV-2
MNV-3
MNV-4